UCIe-Compliant Chiplet Interconnect Design Leveraging Cutting-Edge Packaging Technologies

Yu-Jie Huang, Mu-Shan Lin, Chien-Chun Tsai, Wei-Chih Chen, Hsin-Hung Kuo, Shu-Chun Yang, Shenggao Li

TSMC, Taiwan

Abstract

UCIe is a new chiplet interconnect standard offering superior bandwidth density and interoperability. This paper provides a comprehensive exploration of UCIe interconnect design, focusing on four essential aspects: interface circuit architecture, floorplan strategies, package-level channel optimization, and power delivery network (PDN) analysis. The insights presented offer a systematic approach to design UCIe-compliant interfaces, considering various packaging options and link speeds to achieve the best-fit design.

I. Introduction

About a decade ago, the semiconductor industry followed Moore's Law, which predicted that transistor counts on integrated circuits would double every two years. In the past ten years, demand for computing power, especially for AI, has skyrocketed. Now, computing capacity doubles every 3.4 months [1], about seven times faster than Moore's Law. This rapid growth requires new strategies and innovations.

To tackle this, the chiplet design concept emerged. Traditionally, components like GPUs, CPUs, and memory were on a single System-on-Chip (SoC). As die sizes grew, they hit the reticle limit. Chiplet design overcomes this by integrating smaller dies into one package, breaking the reticle limit and improving yield, power, performance, area (PPA), cost, and flexibility [2]. It enables integration of diverse technologies, such as combining a 7nm memory die with a 5nm CPU die, fostering collaboration between chip vendors and facilitating a shift from traditional CMOS to an integrated system design.

A crucial element in advancing chiplet design is the die-to-die (D2D) interface, which must maintain high-quality connectivity to ensure optimal system performance and reliability. Despite extensive research [3-9] and the emergence of various commercial products [5] and standards like Bunch of Wires (BoW) [10], Advanced Interface Bus (AIB) [11], and High Bandwidth Interconnect (HBI) [12], each solution features distinct design attributes and specifications. This diversity leads to a fragmented ecosystem since these interfaces are incompatible with one another. Thus, the lack of standardization poses challenges for interoperability between chiplets from different vendors, complicating design and integration processes.

To address these challenges, the Universal Chiplet Interconnect Express (UCIe) [13] was proposed as a new die-to-die interconnect standard to align industry practices and facilitate seamless chiplet communication. Supporting 2D, 2.5D, and 3D packages, UCIe emphasizes interoperability in form factor, bump map, protocol, and electrical/channel design. Fig. 1 illustrates the UCIe bump-out plan for interoperability. A key feature is the fixed module width for the PHY module, ensuring compatibility across generations. For instance, a design with a bump pitch reduced from 55μm to 35μm remains compatible with an earlier 55μm design. UCIe specifies two module types for advanced packages: 64 data lanes and 32 data lanes, both maintaining a width of 388.8μm to ensure interoperability across different bump pitches and column numbers. The staggered bump design optimizes area bandwidth (BW) density (BW/area). With advanced packaging enhancing its routability, the 64-lane module achieves superior shoreline bandwidth density (BW/length). In contrast, the 32-lane module is tailored for lower BW applications, providing a cost-effective solution by using fewer interconnect layers and a smaller silicon area compared to the 64-lane design. Despite variations in bump arrangements among modules, UCIe guarantees interoperability, enabling a 32-lane module to connect with the lower lane numbers (0 to 31) of a 64-lane counterpart.

As demonstrated in Fig. 2, UCIe exhibits an outstanding Figure of Merit (FoM) in terms of (Gbps/mm)/(pJ/bit). This superior

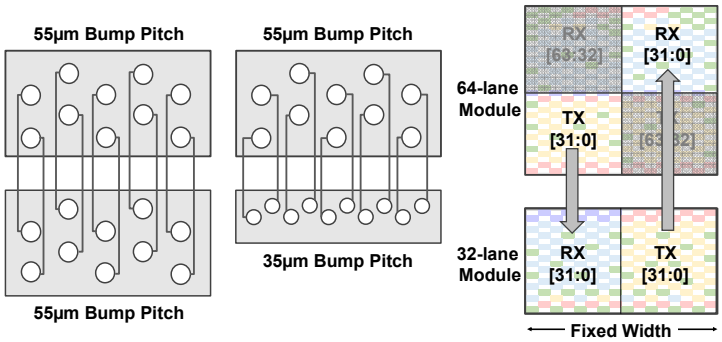

Fig. 1. UCIe bump-out plan for interoperability.

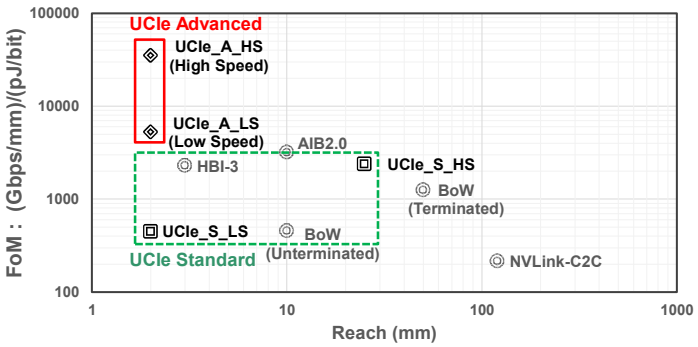

Fig. 2. FoM Comparison between UCIe and current D2D standards.

performance is particularly evident within a 2mm reach, where the UCIe significantly outperforms the current standard, making it an optimal solution for high-performance applications requiring compact form factors, great energy efficiency, and high data throughput.

Designing a UCIe interface is a complex engineering task that requires balancing various technical needs to ensure seamless interoperability among different chiplets. Designers must manage signal integrity, power distribution, and thermal dissipation, all while maintaining low latency, high energy efficiency, and maximizing data throughput. The design must be scalable for future semiconductor advancements and include testability and compliance to ensure verification and reliability. Navigating these challenges while maintaining industry standards underscores the intricate nature of UCIe interface design.

In this paper, we delve into the UCIe interface, examining its architecture, considering floorplan, evaluating package channels, and analyzing the power delivery network. Our detailed exploration aims to provide a clear and comprehensive understanding of UCIe design, offering valuable insights and a well-rounded perspective.

II. UCIe-Compliant Interface Architecture

While UCIe offers exceptional performance and interoperability, it also presents several challenges in interface circuit design. Here, we highlight crucial design principles that must be thoroughly considered to meet the stringent UCIe specifications.

A. Multiple Data Rate Support

To ensure UCIe interoperability, the interface must support a range of data rates from 4Gb/s to 32Gb/s while maintaining backward compatibility. This necessitates an adaptable circuit capable of handling various data rates within this spectrum. Fig. 3 illustrates a simplified architecture of a UCIe module, featuring a transmitter (TX) and a receiver (RX) in each data lane, as well as a clock generator on the transmitter side for precise clocking and the provision of two-phase forwarded clocks to the receiver.

Given the diverse data rates, the clock operation scheme and key components like the phase-locked loop (PLL), the delay-locked loops (DLL), and the phase interpolators (PIs) must be adjusted for optimal performance. The module can operate in Quad Data Rate (QDR) mode at high speeds of 32Gb/s or 24Gb/s, and in Double Data Rate

2025 IEEE Custom Integrated Circuits Conference (CICC) | 979-8-3315-1745-8/25/$31.00 ©2025 IEEE | DOI: 10.1109/CICC63670.2025.10983497

Authorized licensed use limited to: Synopsys. Downloaded on February 15,2026 at 15:51:20 UTC from IEEE Xplore. Restrictions apply.
979-8-3315-1745-8/25/$31.00 ©2025 IEEE

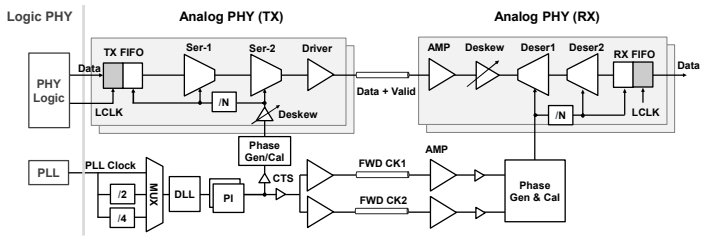

Data Rate (Gb/s)	Clock Scheme	PLL Clock (GHz)	PLL Divider Ratio	CTS (GHz)	FWD CK1 Phase	FWD CK2 Phase	SerDes Bus Ratio	LCLK (GHz)
32	QDR	8	1	8	45	135	16:1	2
24	QDR	6	1	6	45	135	16:1	1.5
16	DDR	8	1	8	90	270	8:1 / 16:1	2 / 1
12	DDR	6	1	6	90	270	8:1 / 16:1	1.5 / 0.75
8	DDR	8	2	4	90	270	4:1 / 8:1	2 / 1
4	DDR	8	4	2	90	270	4:1	1

Fig. 3. UCIe interface architecture to support multiple data rates.

(DDR) mode at lower speeds such as 16Gb/s, 12Gb/s, 8Gb/s, or 4Gb/s. Additionally, it can support different bus ratios, such as 4:1, 8:1, and 16:1 in Fig. 3, to accommodate various SoC system clock operations from 0.75GHz to 2GHz. Thus, the serializer and de-serializer need to be reconfigurable to dynamically adjust clocking and data handling, ensuring consistent performance across various data rates and modes. While this high degree of flexibility is essential for interoperability, it leads to increased power consumption, larger chip area, and heightened design complexity.

B. Clock Gating

To minimize unnecessary power consumption, the UCIe interface supports clock gating mode. However, this introduces certain design constraints and challenges. Firstly, it reduces the flexibility of the clock path design. Since the clock is not free-running, adaptive circuits like duty-cycle correctors (DCCs) cannot employ continuous analog feedback methods. This is because they require long settling time for initialization and cannot sample data accurately in time, as depicted in Fig. 4(a). Therefore, it is advisable to implement the clock calibration circuit using digital control methods, such as the architecture shown in Fig. 4(b). This approach utilizes a finite state machine (FSM) and a digital-to-analog converter (DAC), enabling it to maintain the optimal DAC output voltage after completing the clock calibration phase. As a result, it remains unaffected by clock gating during operations.

Furthermore, transitioning from low-power clock gating mode to normal operation can lead to a sudden surge in current, causing significant voltage droop. This can increase the probability of demodulation errors in the first data sample captured by the rising clock edge. To mitigate this issue, a matched-delay architecture can be employed to enhance tolerance to dynamic voltage droop due to clock gating. Additionally, improving the power delivery network (PDN) by adding sufficient decoupling capacitors on the chip or package can effectively reduce voltage droop.

C. Matched-Delay Architecture

Fig. 5 presents a design example of a UCIe 64-lane receiver utilizing a matched-delay architecture to achieve a speed of 32Gb/s. The clock path incorporates phase generation and calibration circuits to deliver a high-quality quadrature clock for QDR operation. The clock tree, with balanced leaves, is extensively distributed across all 64 data lanes. In the matched-delay architecture, the delay is predominantly determined by the clock path, as it is generally longer than the data path delay.

To achieve matched delay, common sub-circuits such as amplifiers and deskew circuits are replicated in both the data and clock paths. However, directly duplicating the extensive wiring and intricate phase calibration functions from the clock path to each data lane is impractical. Instead, we use a multi-stage inverter chain to mimic the overall delay characteristics of the clock distribution and phase calibration blocks, thereby enhancing power and area efficiency.

To enhance adjustability and address variations across PVT (Process, Voltage, Temperature) corners, several tunable delay stages are included in the matched delay buffer design. In our design case, the entire clock path delay is about 350ps. The clock path

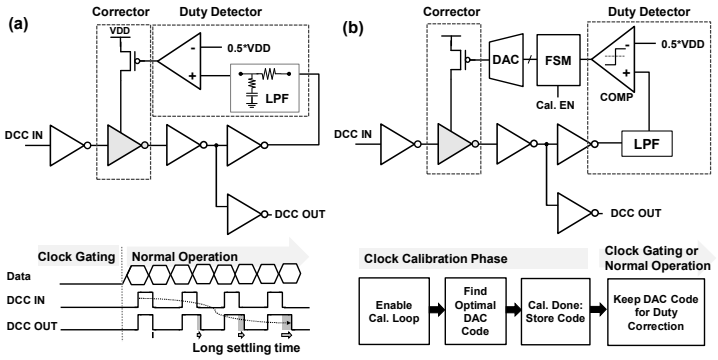

Fig. 4. (a) Analog DCC with continuous closed-loop feedback. (b) Digital DCC with FSM control.

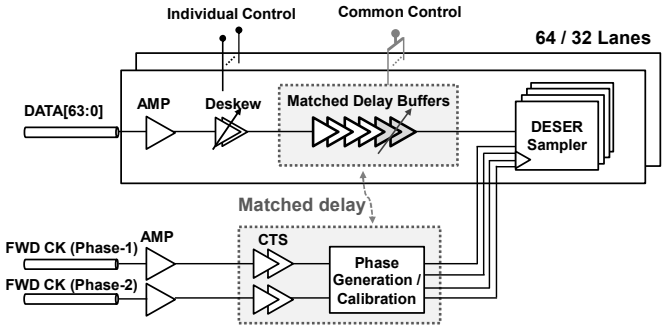

Voltage & Temp. Change	Δdelay / Delay (%)		
	Data Path	Clock Path	"Clock-Data" Skew
20mV Drop	3.23	3.29	0.06
+100°C (RT to 125°C)	-1.34	-1.00	0.34
-65°C (RT to -40°C)	1.03	1.00	-0.03

Fig. 5. UCIe receiver with matched-delay architecture.

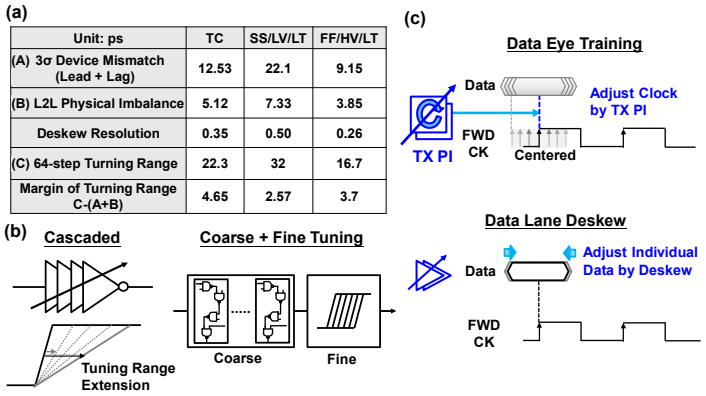

Unit: ps	TC	SS/LV/LT	FF/HV/LT
(A) 3σ Device Mismatch (Lead + Lag)	12.53	22.1	9.15
(B) L2L Physical Imbalance	5.12	7.33	3.85
Deskew Resolution	0.35	0.50	0.26
(C) 64-step Turning Range	22.3	32	16.7
Margin of Turning Range C-(A+B)	4.65	2.57	3.7

Fig. 6. (a) L2L skew simulation for deskew design. (b) Techniques to enlarge deskew range. (c) Data eye training and lane deskew.

experiences a delay variation of 3.29% with a 20mV voltage droop and 1% with a temperature change from 25°C to 125°C or -40°C. The matched-delay design in the data path compensates for these changes, resulting in only 0.06% and 0.34% variation in clock-to-data skew. This demonstrates the high resilience of the matched-delay structure to dynamic voltage droop and temperature drift.

D. Deskew & D2D Data Eye Training

To eliminate static lane skew, each data lane is implemented as a hardened macro, as shown in Fig. 5. However, at a link speed of 32Gb/s, the eye margin is minimal and cannot accommodate significant lane-to-lane (L2L) mismatches caused by random device variations or physical imbalances, such as clock distribution asymmetry. To address this, a per-lane deskew buffer is added to each data lane to provide the ability to fine-tune individual lane delays with an adjustment resolution of less than 16mUI, in accordance with the UCIe specification.

Authorized licensed use limited to: Synopsys. Downloaded on February 15,2026 at 15:51:20 UTC from IEEE Xplore. Restrictions apply.

To determine the appropriate tuning range for the deskew circuit, simulations were conducted to evaluate the clock-to-data skew caused by device mismatch (3σ for Lead + 3σ for Lag) and L2L physical imbalances across various PVT corners. As illustrated in Fig. 6(a), our design incorporates 64 adjustment steps to meet system tuning range requirements with a margin of 2.57ps across corners while ensuring a fine resolution of less than 0.5ps (0.16mUI at 32Gb/s) at the slowest corner.

At high-speed operations, each deskew stage unit requires a high slew rate to prevent inter-symbol interference (ISI), which limits the delay range that each stage can correct. Therefore, multiple stages can be cascaded to expand the tuning range, or circuit techniques employing both coarse and fine tuning [6] can be used to achieve the desired performance, as shown in Fig. 6(b).

To achieve D2D timing closure when interfacing with a counterpart chip, a data eye training procedure is performed between the transmitter (TX) and the receiver (RX), as illustrated in Fig. 6(c). This process involves adjusting TX's phase interpolator (PI) code to identify the optimal capture clock phase for RX, ensuring the capture clock is centered within the data eye. Subsequently, each RX data lane's deskew buffer is individually fine-tuned to correct any L2L mismatches.

III. Floorplanning

Floorplan design is crucial in UCIe chiplet interface, as it shapes the physical layout and directly impacts performance, power efficiency, and manufacturability. An effective floorplan optimizes the placement of functional blocks, minimizes interconnect lengths, and ensures proper power distribution and heat dissipation.

A. Block Instantiation

Fig. 7 presents the floorplan of a 64-lane UCIe PHY, featuring a UCIe-compliant 10-column bump map with 15 data bumps arranged every two columns. The design groups 15 TXIO or RXIO units, aligning each cluster with the two-column bump configuration. This strategic placement of the main-band TXIOs and RXIOs, which handle high-speed data processing, near the data bumps is intended to minimize latency and maximize bandwidth. This arrangement also promotes balanced bump-to-IO routing, effectively reducing physical lane-to-lane skew.

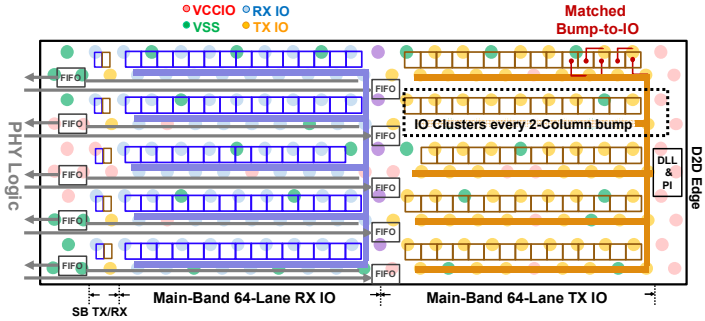

Fig. 7. Key block instantiation in 10-column 64-lane UCIe PHY module.

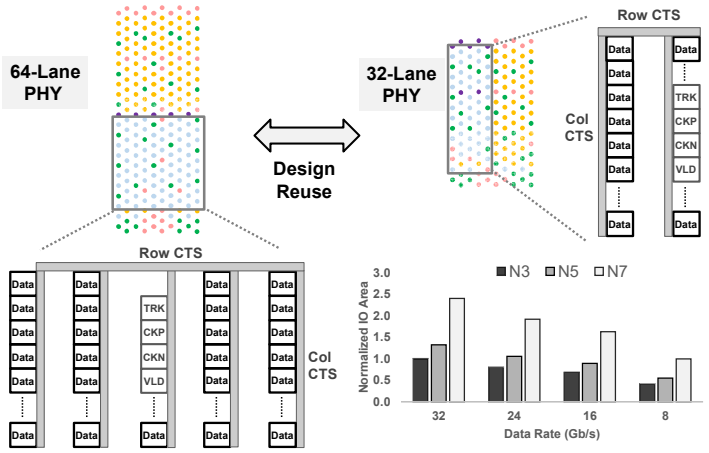

Fig. 8. Modular design in 64-lane and 32-lane UCIe PHY.

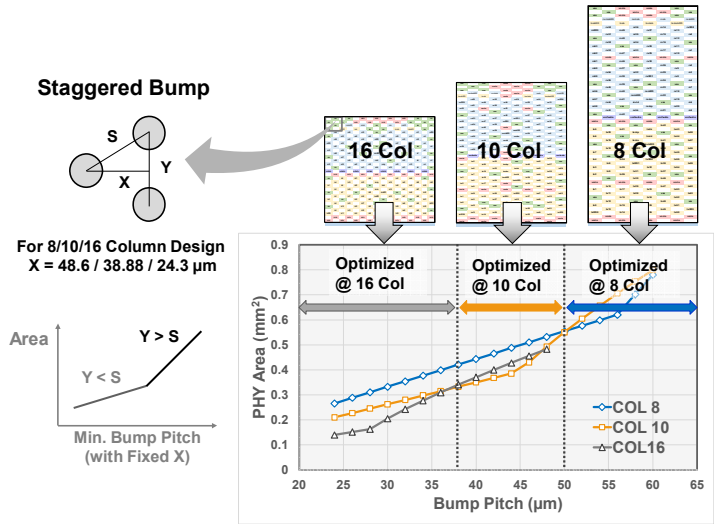

Fig. 9. Bump map optimization based on bump pitch.

In the UCIe design, power bumps are distributed across the module. This distribution supports an even placement of power-intensive blocks, such as high-speed I/Os and clock paths, ensuring reliable power delivery and minimizing IR drop. This even distribution is crucial for effective heat dissipation, especially in compact advanced packages. The TX and RX FIFOs are positioned near the TXIO and RXIO clusters to further decrease latency.

Clock generation circuits, including DLL, PI, and phase correction units, are located at the die edge, where only power bumps are present, providing ample and clean space to maintain clock quality. The RX side is densely populated with parallel data bus routes between the logic PHY and analog PHY interface, requiring careful consideration of routing congestion in the UCIe interface design. To manage these extensive data buses effectively and streamline timing verification, techniques such as inserting control and status registers (CSRs) and using automatic placement and routing (APR) can be employed.

B. Modular Design

To improve design efficiency, we have modularized key functional blocks, such as data and clock I/Os and clock path elements, as illustrated in Fig. 8. This modular approach enhances data lane matching and simplifies transitions between modules. For example, the components of a 64-lane UCIe PHY can be easily reconfigured for a 32-lane design. This hierarchical design concept allows us to build a library of commonly used modules, facilitating scalable design and enabling rapid prototyping for future modifications, such as changes to the bump map or performance upgrades.

The size of these modular blocks varies depending on the supported link speeds and the specific process nodes. For instance, we have analyzed the RXIO at 3nm, 5nm, and 7nm technology nodes, focusing on the area requirement ratios for different data rate capabilities, as illustrated in Fig. 8. By leveraging these I/O area ratios, we can determine the optimal bump pitch scaling needed to fit the circuit area, thereby enhancing the UCIe module design across a range of specifications and conditions.

C. Bump Map Optimization

To optimize area bandwidth density, the UCIe employs a staggered bump placement. Within a fixed module width, UCIe offers three bump map configurations with varying column counts: 8, 10, and 16 columns. By adjusting the bump pitch, we can evaluate the resulting PHY area under different column arrangements. As shown in Fig. 9, with a fixed horizontal width (X), an increase in bump pitch causes the shortest edge in the staggered bump layout to shift from the vertical (Y) to the diagonal (S). This leads to distinct changes in the slope of the required area. Each column configuration exhibits unique performance characteristics. Specifically, for bump pitches under 38µm, the 16-column design achieves the smallest PHY area.

Authorized licensed use limited to: Synopsys. Downloaded on February 15,2026 at 15:51:20 UTC from IEEE Xplore. Restrictions apply.

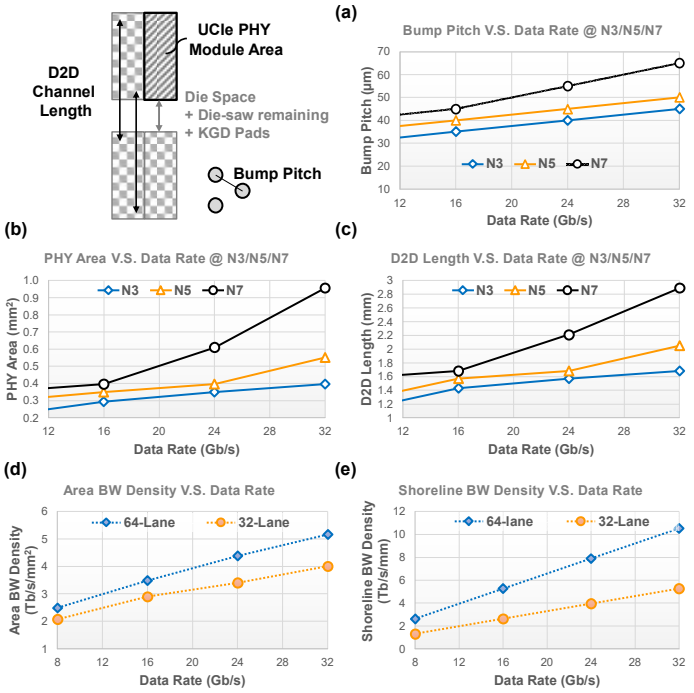

Fig. 10. UCIe PHY performance versus link speed capability and process nodes.

For pitches between 38µm and 50µm, the 10-column configuration is optimal, while for pitches over 50µm, the 8-column setup offers the best area performance. After determining our bump pitch based on package process capabilities and the size of the high-speed I/O circuits, this analysis helps us identify the optimal column count for efficient area utilization.

To illustrate this, take our 64-lane UCIe PHY design case in advanced package as an example. Based on I/O area analysis in Fig. 8, we can determine the optimal bump pitch and map for different speed and process requirements, as shown in Fig. 10(a). This analysis helps identify the necessary PHY area, as illustrated in Fig. 10(b). It is evident that higher speed requirements lead to more complex circuits, which necessitate larger bump pitches and PHY areas. Another crucial factor is the die-to-die (D2D) channel length, which significantly impacts signal integrity within the package. As depicted in Fig. 10(c), higher speeds correlate with longer D2D channel lengths, resulting in increased channel loss. Moreover, higher speeds produce smaller data eyes, which demand greater signal integrity. This highlights the challenges in UCIe design, where striving for higher speeds and increased total bandwidth leads to greater complexity in both circuit and channel design. Fortunately, advancements in process technology, like from N7 to N3 process nodes in the figures, can effectively reduce PHY area demands and mitigate the D2D length penalty in high data rate applications.

Fig. 10 (d) and (e) illustrate the key parameters of D2D performance, including area and shoreline bandwidth density, for different link speed requirements in the 3nm 64-lane and 32-lane UCIe modules. The data clearly demonstrate that the 64-lane configuration outperforms the 32-lane version, showing a 20-30% increase in area BW density and a twofold improvement in shoreline BW density. However, this superior performance also introduces challenges in keeping signal integrity and supporting high-density D2D channel routing at such elevated shoreline densities. Additionally, ensuring effective power distribution for the high-current, high-speed I/Os in the compact 64-lane design is critical. As a result, we will delve deeper into the channel and power delivery network aspects to address these challenges comprehensively.

Mainband + Sideband	Advanced X64	Advanced X32	Standard X32
Interconnect #	156	88	88
Interconnect Density (trace # /mm)	401	226	77

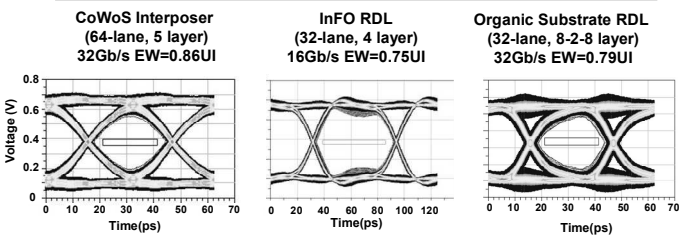

Fig. 11. Interconnect density and simulated eye diagram in advanced and standard packages.

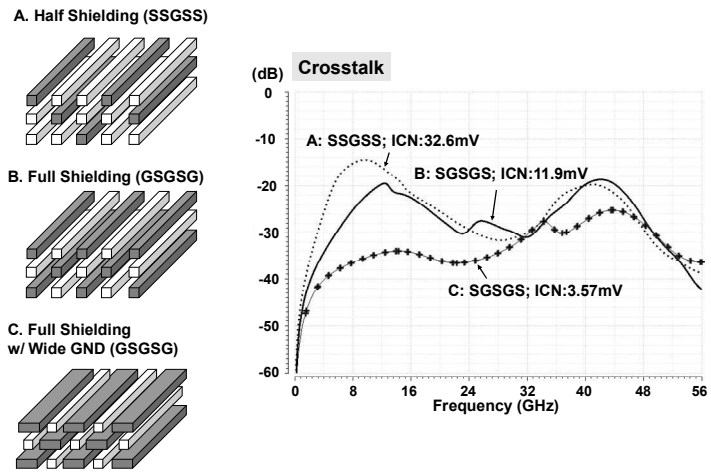

Fig. 12. Crosstalk comparison across three routing styles.

IV. Interconnect Channel

Designing efficient UCIe D2D interconnect channels is vital for optimal chiplet integration. The optimization process is significantly influenced by packaging choices and physical design patterns, which together determine signal integrity, data rates, and overall system performance.

A. Co-design with Packaging

When designing UCIe channels, choosing the right packaging—whether it be standard redistribution layer (RDL), advanced RDL, or a silicon interposer—requires a careful balance of performance, cost, and application needs. Standard RDL, typically used in organic substrates, is suitable for cost-sensitive 2D applications like consumer electronics. Advanced RDL, such as TSMC's Integrated Fan-Out (InFO) [14], offers a finer routing pitch, making it a cost-effective option for mobile devices and general-purpose computing in both 2D and 2.5D designs by balancing routing density and performance. For high-performance computing, silicon interposers like TSMC's Chip-on-Wafer-on-Substrate (CoWoS) [15] and Intel's Embedded Multi-die Interconnect Bridge (EMIB) [16] provide ultra-fine pitches, facilitating high-density interconnects, low latency, and high bandwidth. This makes them well-suited for demanding applications such as AI accelerators and data centers.

UCIe specifies channel parameters for both advanced and standard packaging, covering aspects such as channel length, pad capacitance, insertion loss (IL), crosstalk (XT), and eye opening, to ensure signal integrity and interoperability [13]. Based on the routability of each packaging type and the required interconnect density, we optimized designs and simulated eye diagrams, as shown in Fig. 11. For a 64-lane advanced package, an interposer with 5 metal layers can achieve data rates of 32Gb/s. In contrast, advanced RDL with 4 layers is limited to support 16Gb/s for a 32-lane module. The standard package necessitates 8 RDL layers to achieve 32Gb/s, utilizing the top 8 layers of the 8-2-8 stack for the D2D channel within the organic substrate.

B. Channel Design Optimization

In UCIe channel design, where the module width is fixed, optimizing for signal integrity requires careful management of the routing style, as well as the width and spacing of shielding and signal lines. This is especially crucial when working with limited layers, as these factors significantly impact insertion loss and crosstalk.

Authorized licensed use limited to: Synopsys. Downloaded on February 15,2026 at 15:51:20 UTC from IEEE Xplore. Restrictions apply.

Fig. 12 presents a comparative analysis of crosstalk performance across different routing styles, including half shielding (SSGSS), full shielding (GSGSG), and an enhanced version of full shielding with widened ground in the GSGSG structure, all of which maintain the same fixed width for comparison. The analysis clearly shows that the integrated crosstalk noise (ICN) for the full-shielding configuration is significantly lower than that of the half-shielding setup. Specifically, the ICN is reduced from 32.6mV to 11.9mV, representing an improvement of 2.7 times. Moreover, by doubling the width of the ground shielding, the ICN can be further reduced to just 3.57mV, offering an additional enhancement of approximately 3.3 times. Based on these findings, we will adopt the full shielding with wider ground routing style to effectively minimize crosstalk.

After selecting the routing style, our next focus is on optimizing the width and spacing parameters between the signal and shielding lines. Fig. 13(a) presents a GSG design pattern within a unit width, comprising two spaces (SP), one signal width (WS), and one shielding width (WG). With fixed spacing, increasing the shielding width is more advantageous than expanding the signal width. This is because widening the shielding significantly reduces crosstalk (XT), while increasing the signal width not only decreases resistance but also raises parasitic capacitance to the top and bottom shielding, offering limited benefits for insertion loss (IL). If the signal width is kept constant, expanding the shielding reduces the spacing, leading to an increase in IL. This underscores the trade-off between XT and IL. The optimal design strikes a balance between XT and IL, ensuring superior signal integrity, as indicated by eye diagram quality.

To support this perspective, Fig. 13(b) showcases two design scenarios at a 32Gb/s speed. In Case I, the width and spacing for all parameters (WS/WG/SP) are kept equal. Conversely, Case II reduces the signal width and some spacing to double the shielding width. This adjustment in Case II results in a significant improvement in crosstalk (XT), with a reduction of 10.8dB compared to Case I,

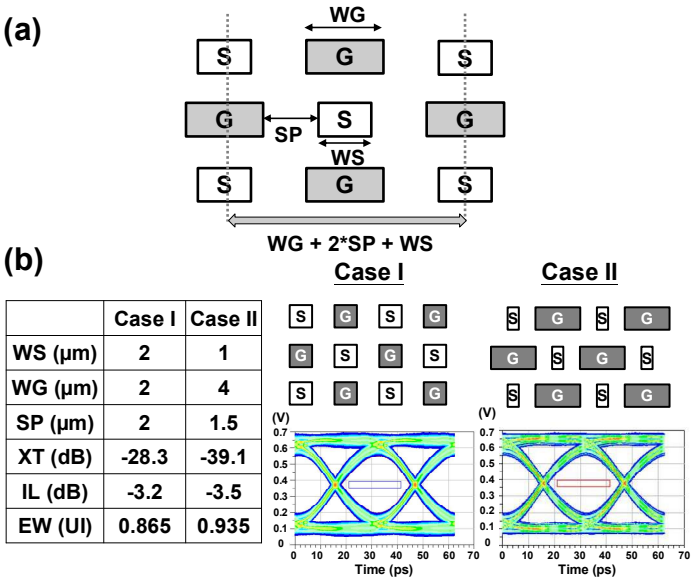

	Case I	Case II
WS (μm)	2	1
WG (μm)	2	4
SP (μm)	2	1.5
XT (dB)	-28.3	-39.1
IL (dB)	-3.2	-3.5
EW (UI)	0.865	0.935

Fig. 13. (a) Parameter optimization in channel design. (b) Performance comparison between two design cases at 32Gb/s.

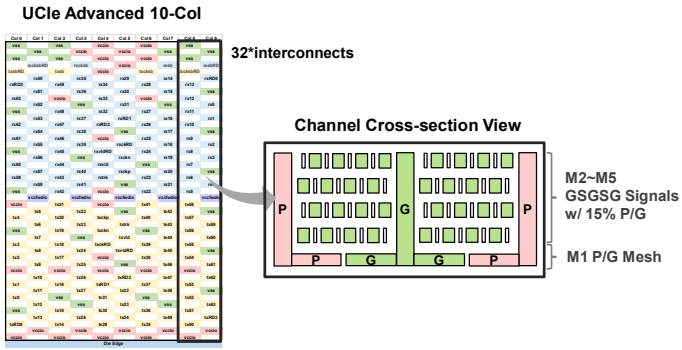

Fig. 14. Implementation of a channel on a 5-layer interposer.

Voltage = 0.7V	Energy Efficiency (pJ/b)	
Speed (Gb/s)	Advanced	Standard
32	0.6	1.25
24	0.6	1.25
16	0.6	1
8	0.5	1

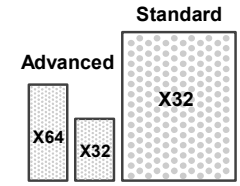

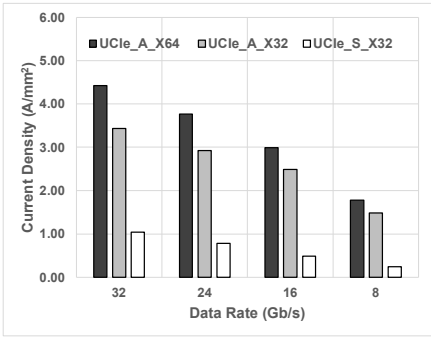

Fig. 15. Current density requirements for UCIe in both standard and advanced packages.

while maintaining comparable insertion loss (IL). Additionally, Case II exhibits a superior eye width, indicating enhanced signal quality.

C. Implementation Considerations

In addition to ensuring channel signal integrity, it is important to allocate sufficient routing width for power and ground to facilitate effective power delivery across the package. For instance, our design dedicates at least one layer to a robust power mesh plate, and signal layers reserve a minimum of 15% of their routing tracks for power/ground (P/G), as illustrated in Fig. 14. Another consideration is the potential use of power (VCCIO) as a shielding bias alongside ground (VSS) to enhance routing flexibility. However, due to the uneven distribution of VCCIO bumps compared to VSS bumps in the UCIe bump map, and the lack of interconnection between the power of both chiplets in the channel design, it is inadvisable to use VCCIO for this purpose.

V. Power Delivery Network (PDN)

In high-density, high-speed I/O interface designs such as UCIe, the PDN is crucial, particularly when employing advanced compact packaging technologies. Different stacking architectures impose distinct design constraints on each layer, making PDN design more complex than traditional 2D chip-to-chip interfaces.

A. Power Budget

In Fig. 15, we compare the current density requirements for UCIe in both standard (2D) and advanced (2.5D) packaging designs to achieve different maximum link speeds. Based on a 0.7V operation voltage and energy efficiency in UCIe, along with the previously analyzed PHY area requirements, we observe that the UCIe PHY current density increases with higher maximum link speeds in both package types. Notably, the 64-lane advanced package design exhibits the highest current density, reaching up to 4.43A/mm² at 32Gb/s. This confirms that while 64-lane offers excellent bandwidth performance, it also poses significant challenges for PDN design.

B. IR/EM Consideration

To address the demanding PDN requirements in a 64-lane advanced packaging UCIe, it is essential to assess and allocate budgets for static IR drop and Electromigration (EM) in the early design phase. Fig. 16(a) presents a cross-sectional view of an advanced package using a silicon interposer, such as CoWoS. As current flows from the large PCB area to the compact chiplet UCIe interface, it traverses several package paths, each contributing to IR drops. The current density increases as it approaches the chiplet, making it crucial to ensure that power and ground bumps, including ball grid array (BGA), C4 bumps, and microbumps, are adequately and optimally distributed across the floorplan. Additionally, maintaining sufficient through-silicon via (TSV) density and implementing a robust power/ground (P/G) mesh layer are important to minimize excessive IR drops and ensure uniform power distribution.

Electromigration (EM) poses another significant challenge, particularly for solder bumps, due to their lower current tolerance compared to other metals. It is imperative to ensure that microbumps have adequate EM tolerance, especially near the chiplet D2D interface, where circuit density and current densities are higher. For example, in a 64-lane UCIe module with 34 VSS and 30 VCCIO

Authorized licensed use limited to: Synopsys. Downloaded on February 15,2026 at 15:51:20 UTC from IEEE Xplore. Restrictions apply.

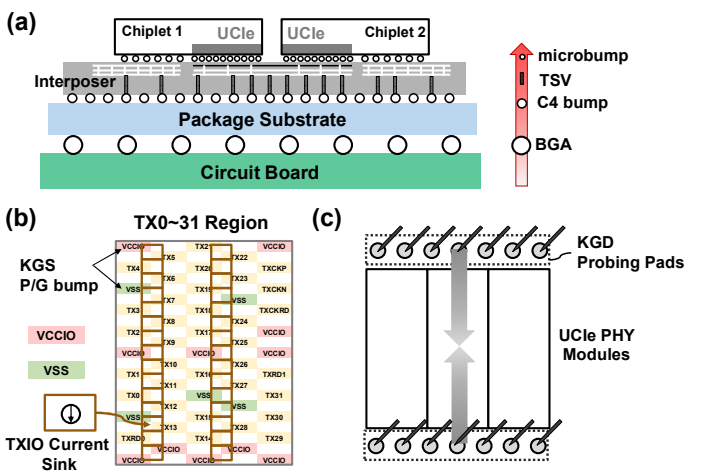

Fig. 16. (a) Current path in an advanced package with a silicon interposer. (b) Early IR/EM assessment setup based on the floorplan. (c) Significant IR drop in KGD test.

bumps, operating at 32Gb/s with a 0.7V supply and 0.6pJ/bit energy efficiency, each VCCIO microbump carries 58.5mA of current. Consequently, each microbump must be engineered to withstand EM stress effectively. Additionally, an examination of the UCIe-defined P/G bump map in Fig. 16(b) reveals a lack of uniformity, necessitating additional EM design margins to prevent yield loss in the package's microbumps. As a viable solution, at the highest operating speeds, we can consider inserting additional P/G bumps with a compatible signal exit order to alleviate the stringent EM stress.

Once a UCIe floorplan design is completed, as shown in Fig. 7, we can obtain early preliminary assessment results by replacing each block's current consumption with an ideal current sink positioned according to the floorplan, such as the TXIO in Fig. 16(b). This approach allows us to conduct a preliminary static IR/EM analysis using only the power mesh layout on the top metal layers, along with the corresponding package's physical design. If significant power delivery risks are identified, adjustments can be made to the floorplan. This proactive approach helps prevent late-stage IR/EM issues when major design changes are no longer feasible. Additionally, to facilitate known-good-die (KGD) testability and account for IR drop uniformity, KGD probing pads are added on both the top and bottom sides of the PHY module, as depicted in Fig. 16(c). Due to the greater depth of the 64-lane module, data I/Os located in the center, farther from KGD power bumps, experience more significant IR drops compared to known-good-stack (KGS) tests, leading to performance degradation. Consequently, during KGD testing, the system may need to operate at reduced speeds or conduct segmented tests to effectively lower overall current levels.

C. Dynamic Voltage Droop

Next, we explore the complex challenge of managing dynamic voltage droop in PDN design. As previously noted, when the PHY transitions from clock gating mode to normal operation, the sudden change in current can cause a voltage droop, negatively affecting circuit performance and potentially leading to initial data misinterpretation. According to UCIe specifications, supply voltage noise must stay below 30mV at high speeds of 24Gb/s and 32Gb/s. To manage this dynamic voltage fluctuation, it is essential to incorporate adequate decoupling capacitors into the PDN design.

Fig. 17(a) illustrates the commonly used decoupling capacitors in the advanced package. High-speed circuits frequently utilize local on-die capacitors, such as MOS, MOM, and MIM capacitors. In cutting-edge processes, super-high-density MIM (SHDMIM) capacitors are employed to achieve greater capacitance density [17]. Placing components closer to the circuit improves high-frequency noise suppression, but it comes with significant costs due to the limited on-die area and inherent restrictions on capacitance density. Therefore, embedded deep-trench capacitors (eDTC) on silicon interposers are utilized, offering exceptional capacitance density due to their 3D structure [18]. These capacitors are sufficiently close to the chiplet to

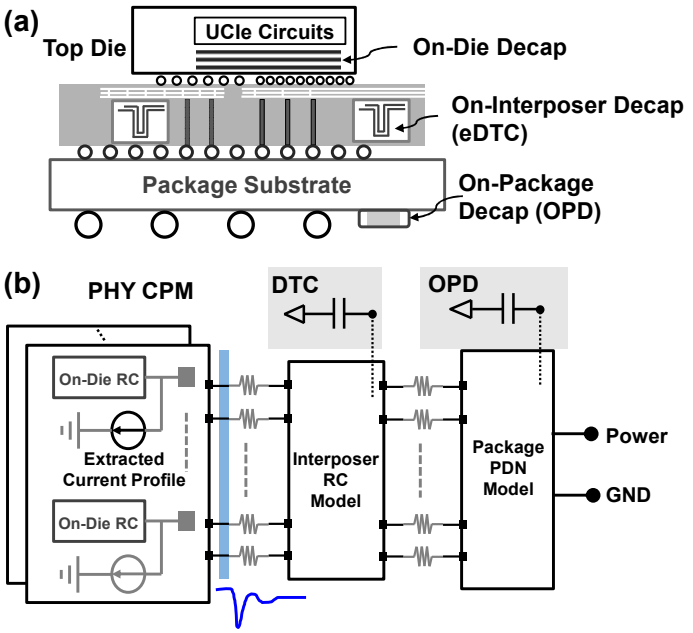

Fig. 17. (a) Decoupling capacitors located in the advanced package. (b) Dynamic power noise simulation setup with CPM.

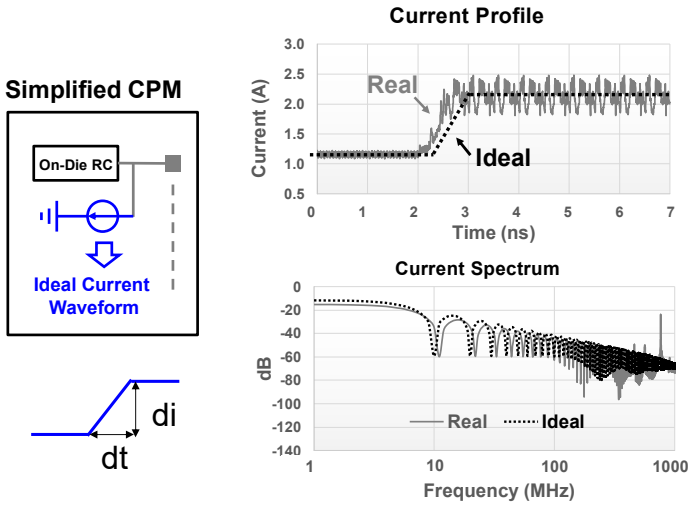

Fig. 18. Simplified CPM using ideal PWL current profile.

effectively mitigate power noise. On-package decoupling capacitors (OPD) within the package offer larger capacitance in the μF range but are only effective for mid- to low-frequency noise due to their greater distance from the chips.

Fig. 17(b) illustrates a simulation method for analyzing dynamic power noise in the PDN. Initially, a chip power model (CPM) is developed, encompassing the on-die RC model and the extracted current profile for the UCIe PHY. This model is then integrated with the interposer's RC model, which includes the eDTC, and the package's PDN model, which incorporates the OPD. This integration allows for an accurate representation of the voltage ripple behavior on the chiplet. However, similar to the challenges encountered with static IR/EM analysis, waiting until the chip design is complete to build the CPM would be too late for making any optimizations.

To address this, we propose a simplified CPM method for early PDN verification. As depicted in Fig. 18, we streamline the entire chip's extracted current waveform into an ideal piecewise linear (PWL) current profile, defined primarily by two parameters: the change in current (di) and the change in time (dt). The spectral composition of the PWL current resembles that of the actual current, as shown in the figure. Consequently, in the early stages of design, once system current specifications and operational speed requirements are established, preliminary values for di and dt can be determined. By

Authorized licensed use limited to: Synopsys. Downloaded on February 15,2026 at 15:51:20 UTC from IEEE Xplore. Restrictions apply.

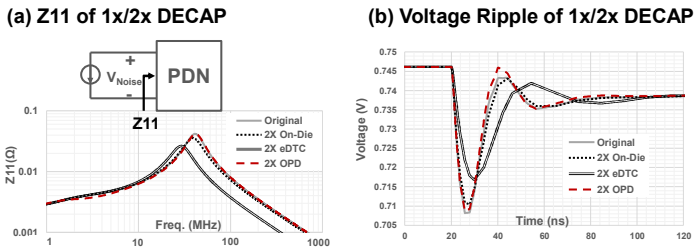

Decap	Z11 Peak Freq.(MHz)	Peak Z11 (mΩ)	Peak Z11 Ratio
Original (All 1X)	40.7	41.5	1.00
2X On-Die	38.9	35.5	0.86
2X eDTC	29.5	26.4	0.64
2X OPD	41.7	41.6	1.00

Decap	Ripple Vpp (mV)	Vpp Ratio
Original (All 1X)	38	1
2X On-Die	35.8	0.94
2X eDTC	29.4	0.77
2X OPD	37.5	0.99

Fig. 19. Impact of doubling different decoupling capacitors on PDN in terms of (a) Z11 and (b) voltage ripple.

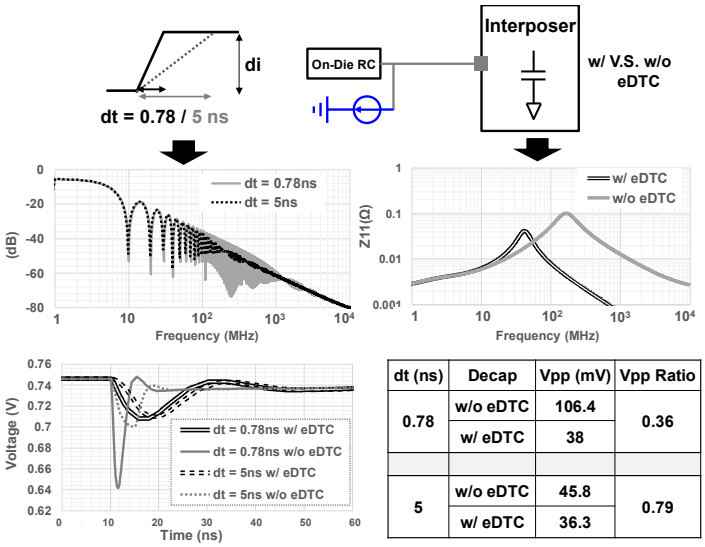

dt (ns)	Decap	Vpp (mV)	Vpp Ratio
0.78	w/o eDTC	106.4	0.36
	w/ eDTC	38	
5	w/o eDTC	45.8	0.79
	w/ eDTC	36.3	

Fig. 20. The impact of current switching rate (dt) on design cases with and without eDTC.

integrating these parameters with the on-die power RC model, a simplified CPM model can be constructed.

Utilizing this simplified CPM model significantly reduces simulation time, facilitating the evaluation of how additional capacitance at different points in the PDN impacts overall noise. We conducted experiments by doubling the capacitance values of the on-die capacitor, the eDTC on the interposer, and the ODP compared to their original design specifications to observe their effects on the PDN. Fig. 19(a) presents the simulation results for Z11, revealing that doubling the ODP has a negligible impact on the Z11 value of the PDN. In contrast, doubling the on-die capacitor and the eDTC effectively reduces the Z11 peak to 86% and 64% of its original value, respectively. Although the on-die capacitor is closest to the circuitry, it possesses only about 15% of the capacitance of the eDTC. Therefore, doubling the eDTC provides a greater performance improvement. This finding underscores that if process capabilities permit a twofold increase in the effective capacitance density of the eDTC, the system PDN would experience substantial benefits. Fig. 19(b) illustrates their impact on voltage ripple, showing that enhancing the eDTC capacitance density can further suppress the ripple amplitude to 77% of its original value.

We evaluated the impact of eDTC across different speed scenarios. In high-speed applications like 32Gb/s, the current switching rate (dt) is faster compared to slower speeds like 8Gb/s. In our experiment, as shown in Fig. 20, the switching times were set to 0.78ns and 5ns, respectively. The spectral distribution of current between these two cases at frequencies greater than 100MHz exhibited significant differences. The PDN Z11 analysis shows that above 100MHz, the Z11 with eDTC is notably lower than without it, underscoring the importance of eDTC in high-speed scenarios (dt = 0.78ns) by

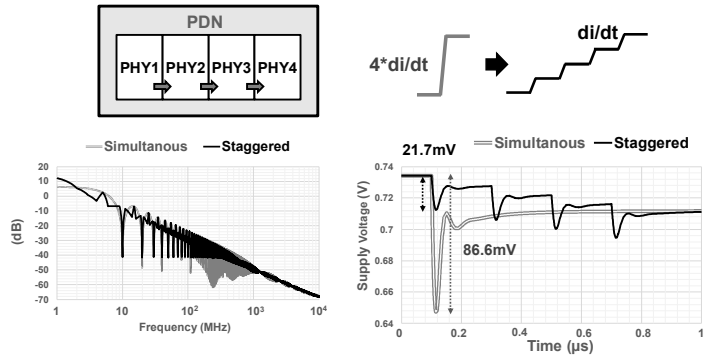

Fig. 21. Staggered activation to relax supply voltage ripple.

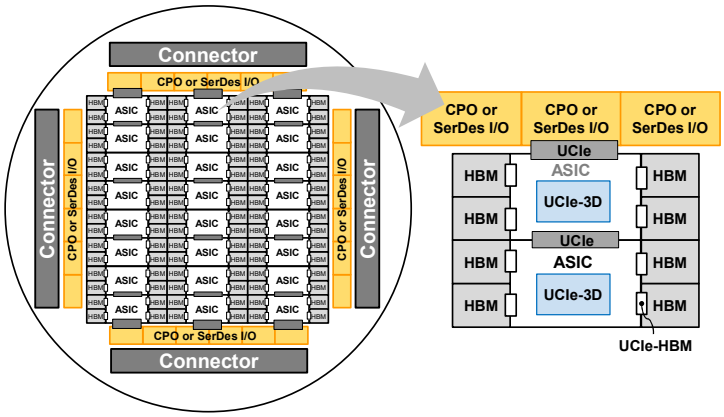

Fig. 22. UCIe applications in SoW.

reducing voltage ripple to 36% of its original value. In slower applications (dt = 5ns), eDTC reduces ripple to only 79% of the original. Therefore, based on the speed requirements, we can choose a package with eDTC to enhance PDN performance or opt for a package without eDTC to reduce costs.

As we continue to enhance the bandwidth density of UCIe, we anticipate larger variations in the PHY current and faster current switching rates. For example, at link speeds exceeding 48Gb/s or 64Gb/s, the rate of change in current (di/dt) increases significantly, leading to more pronounced voltage droop and more demanding PDN requirements. In addition to advancements in process technology to boost capacitance density on packaging or chips, innovative circuit and system methodologies are essential for effective power noise suppression. One such approach involves staggering the activation sequence of PHY modules to prevent large simultaneous current changes. As illustrated in Fig. 21, by sequentially activating four UCIe PHY modules, the system experiences only a quarter of the original current variation. This staggered activation results in a markedly different current spectrum compared to simultaneous activation. Given that the PDN remains unchanged, with a constant Z11, the voltage ripple is effectively reduced from 86.6mV to 21.7mV, or approximately 25% of its original value.

VI. UCIe Applications in Large-scale System

To achieve greater computational power and optimized performance, the industry is continuously progressing towards more expansive system packaging solutions. A prominent example is the System on Wafer (SoW) approach [19], which integrates various semiconductor components onto a single wafer. This method maximizes space efficiency, enhances performance, and minimizes the length of interconnections between individual chips. The integration of diverse chips within a SoW framework underscores the critical importance of die-to-die interfaces, where UCIe technology plays an essential role. UCIe ensures seamless communication between different dies, paving the way for future advancements in high-speed and complex applications.

Fig. 22 provides a detailed application diagram of SoW, showcasing the integration of ASIC, HBM, and I/O chips. The I/O components

Authorized licensed use limited to: Synopsys. Downloaded on February 15,2026 at 15:51:20 UTC from IEEE Xplore. Restrictions apply.

may include high-speed SerDes I/Os or Co-Packaged Optics (CPO) [20] I/Os, designed to deliver higher bandwidth for external communication. The ASIC can leverage the UCIe-3D standard to integrate other chips, such as a CPU with SRAM. The current UCIe interface supports high-speed communication between ASIC-to-ASIC, ASIC-to-CPO I/O, and ASIC-to-SerDes I/O dies. Furthermore, communication between ASIC and HBM can be standardized using a combined UCIe and HBM standard, referred to as UCIe-HBM. By standardizing communication across these diverse chip applications, seamless interaction is ensured, significantly enhancing system integration efficiency and optimizing overall system performance.

VII. Conclusion

The UCIe interconnect stands as a pivotal component in advancing semiconductor integration, acting as a crucial communication bridge among diverse chip types in increasingly complex systems. Through our comprehensive analysis of its architecture, floorplan, channel design, and power delivery network, we have highlighted the intricate considerations necessary for optimizing UCIe interface design. As semiconductor technologies continue to evolve, the role of UCIe will become even more essential, facilitating seamless integration and driving the performance of next-generation systems. Our study not only underscores the importance of UCIe in current designs but also paves the way for future innovations in high-speed, large-scale system packaging solutions.

References:

[1] D. Amodei and D. Hernandez, "AI and Compute," OpenAI, 2018. https://openai.com/index/ai-and-compute/

[2] S. Naffziger et al., "AMD Chiplet Architecture for High-Performance Server and Desktop Products," 2020 IEEE International Solid-State Circuits Conference (ISSCC), San Francisco, CA, USA, 2020, pp. 44-45. https://doi.org/10.1109/ISSCC19947.2020.9063103

[3] M. -S. Lin et al., "A 7nm 4GHz Arm®-core-based CoWoS® Chiplet Design for High Performance Computing," 2019 Symposium on VLSI Circuits, Kyoto, Japan, 2019, pp. C28-C29. https://doi.org/10.23919/VLSIC.2019.8778161

[4] Y. -Y. Hsu et al., "A 7nm 0.46pJ/bit 20Gbps with BER 1E-25 Die-to-Die Link Using Minimum Intrinsic Auto Alignment and Noise-Immunity Encode," 2021 Symposium on VLSI Technology, Kyoto, Japan, 2021, pp. 1-2. https://ieeexplore.ieee.org/document/9508711

[5] N. Nassif et al., "Sapphire Rapids: The Next-Generation Intel Xeon Scalable Processor," 2022 IEEE International Solid-State Circuits Conference (ISSCC), San Francisco, CA, USA, 2022, pp. 44-46. https://doi.org/10.1109/ISSCC42614.2022.9731107

[6] K. Seong et al., "A 4nm 32Gb/s 8Tb/s/mm Die-to-Die Chiplet Using NRZ Single-Ended Transceiver With Equalization Schemes And Training Techniques," 2023 IEEE International Solid-State Circuits Conference (ISSCC), San Francisco, CA, USA, 2023, pp. 114-116. https://doi.org/10.1109/ISSCC42615.2023.10067477

[7] J. Jin et al., "A 4nm 16Gb/s/pin Single-Ended PAM4 Parallel Transceiver with Switching-Jitter Compensation and Transmitter Optimization," 2023 IEEE International Solid-State Circuits Conference (ISSCC), San Francisco, CA, USA, 2023, pp. 1-3. https://doi.org/10.1109/ISSCC42615.2023.10067738

[8] Y. Nishi et al., "A 0.190-pJ/bit 25.2-Gb/s/wire Inverter-Based AC-Coupled Transceiver for Short-Reach Die-to-Die Interfaces in 5-nm CMOS," 2023 IEEE Symposium on VLSI Technology and Circuits (VLSI Technology and Circuits), Kyoto, Japan, 2023, pp. 1-2. https://doi.org/10.23919/VLSITechnologyandCir57934.2023.10185334

[9] K. Seong et al., "A 4nm 48Gb/s/wire Single-Ended NRZ Parallel Transceiver with Offset-Calibration and Equalization Schemes for Next-Generation Memory Interfaces and Chiplets," 2024 IEEE International Solid-State Circuits Conference (ISSCC), San Francisco, CA, USA, 2024, pp. 250-252. https://doi.org/10.1109/ISSCC49657.2024.10454481

[10] S. Ardalan et al., "An Open Inter-Chiplet Communication Link: Bunch of Wires (BoW)," in IEEE Micro, vol. 41, no. 1, pp. 54-60, 1 Jan.-Feb. 2021. https://doi.org/10.1109/MM.2020.3040410

[11] Advanced Interface Bus (AIB) Specifications, September 2019

[12] "OpenHBI Specification Version 1.0," Open Compute Project, 2021.

[13] "Universal Chiplet Interconnect Express (UCIe) Specification Revision 2.0.," 2024.

[14] C. -F. Tseng, C. -S. Liu, C. -H. Wu and D. Yu, "InFO (Wafer Level Integrated Fan-Out) Technology," 2016 IEEE 66th Electronic Components and Technology Conference (ECTC), Las Vegas, NV, USA, 2016, pp. 1-6. https://doi.org/10.1109/ECTC.2016.65

[15] S. Y. Hou et al., "Wafer-Level Integration of an Advanced Logic-Memory System Through the Second-Generation CoWoS Technology," in IEEE Transactions on Electron Devices, vol. 64, no. 10, pp. 4071-4077, Oct. 2017. https://doi.org/10.1109/TED.2017.2737644

[16] R. Mahajan et al., "Embedded Multi-die Interconnect Bridge (EMIB) -- A High Density, High Bandwidth Packaging Interconnect," 2016 IEEE 66th Electronic Components and Technology Conference (ECTC), Las Vegas, NV, USA, 2016, pp. 557-565. https://doi.org/10.1109/ECTC.2016.201

[17] G. Yeap et al., "5nm CMOS Production Technology Platform featuring full-fledged EUV, and High Mobility Channel FinFETs with densest 0.021μm^2 SRAM cells for Mobile SoC and High Performance Computing Applications," 2019 IEEE International Electron Devices Meeting (IEDM), San Francisco, CA, USA, 2019, pp.36.7.1-36.7.4. https://doi.org/10.1109/IEDM19573.2019.8993577

[18] S. Y. Hou et al., "Integrated Deep Trench Capacitor in Si Interposer for CoWoS Heterogeneous Integration," 2019 IEEE International Electron Devices Meeting (IEDM), San Francisco, CA, USA, 2019, pp. 19.5.1-19.5.4. https://doi.org/10.1109/IEDM19573.2019.8993498

[19] S. -R. Chun et al., "InFO_SoW (System-on-Wafer) for High Performance Computing," 2020 IEEE 70th Electronic Components and Technology Conference (ECTC), Orlando, FL, USA, 2020, pp. 1-6. https://doi.org/10.1109/ECTC32862.2020.00013

[20] S. Kannan et al., "High Density Integration of Silicon Photonic Chiplets for 51.2T Co-packaged Optics," 2024 IEEE 74th Electronic Components and Technology Conference (ECTC), Denver, CO, USA, 2024, pp. 81-84. https://doi.org/10.1109/ECTC51529.2024.00022

Authorized licensed use limited to: Synopsys. Downloaded on February 15,2026 at 15:51:20 UTC from IEEE Xplore. Restrictions apply.